esbath
made to mesure

expertbath

// MAMPARA DE BAÑO // PAROIS DE DOUCHE // SHOWER ENCLOSURE //
// CABINA DOCCIA //DUSCHABTRENNUNG // RESGUARDO DE DUCHE //

SHAWA E25

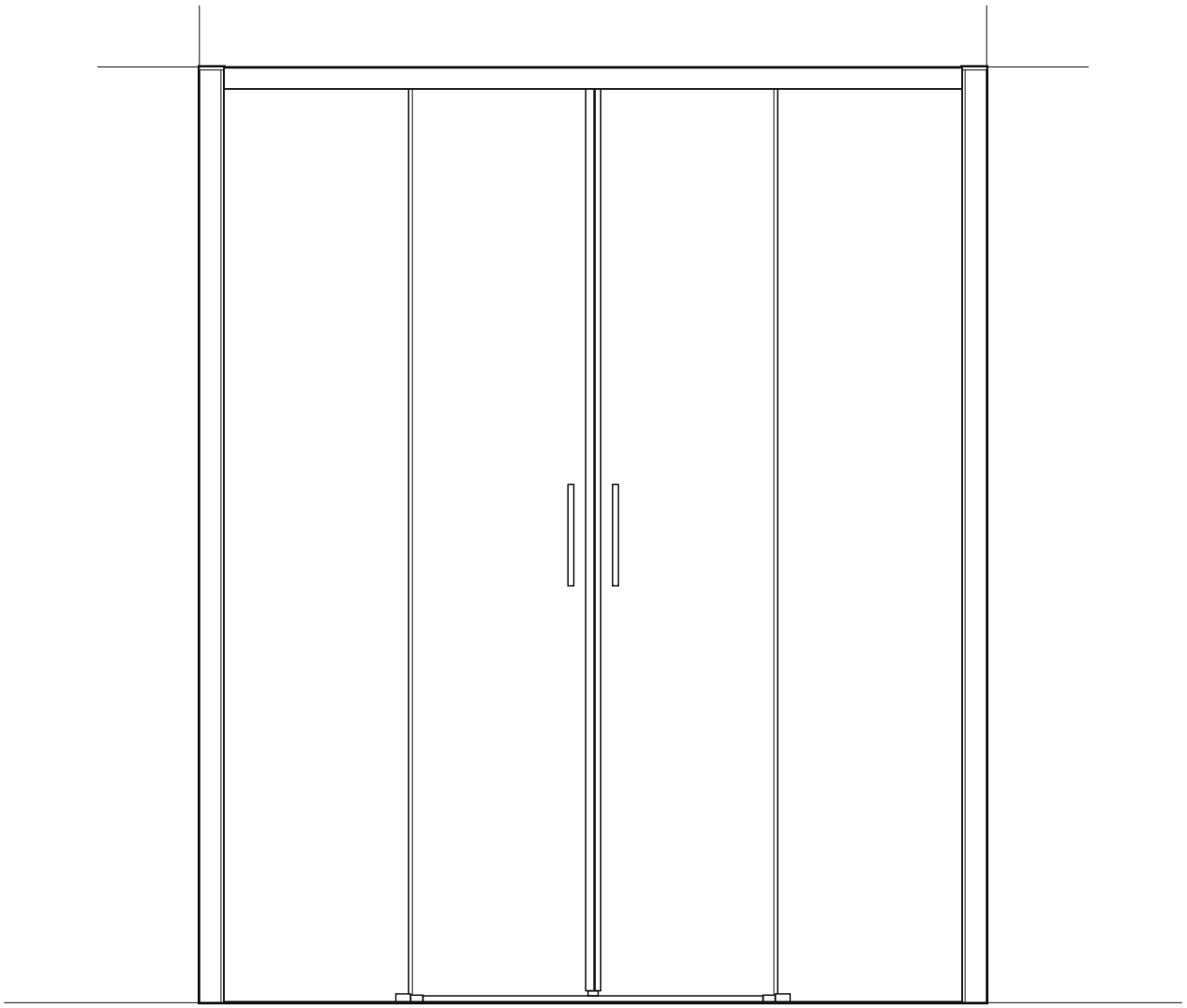

(ES)
(FR)
(EN)
(IT)
(DE)
(PT)

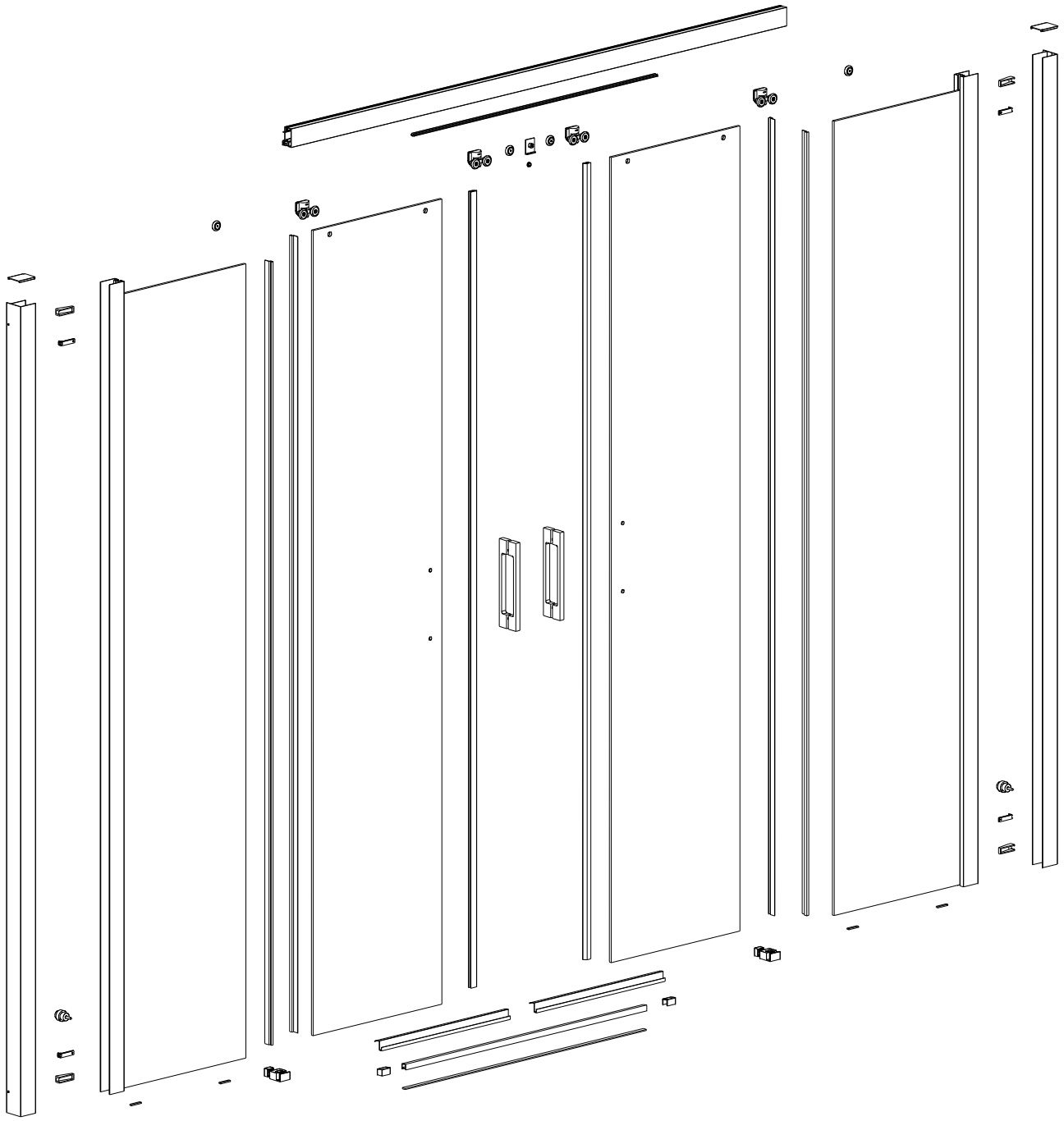

M-01	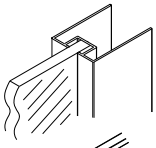	2	M-02	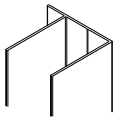	2
M-03	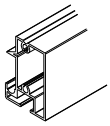	1	M-04		4
M-05		4	M-06	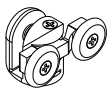	4
M-07	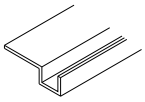	4	M-08	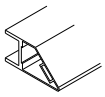	2
M-09		4	M-10	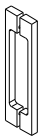	2
M-11	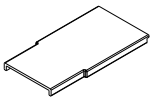	2	M-12	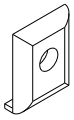	1
M-13	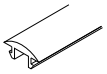	1	M-14		5
			M-16	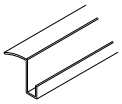	2
M-17	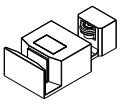	2	M-18	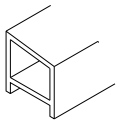	1
M-19	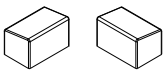	1	M-20	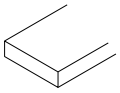	1
M-21		2	M-24	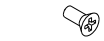 DIN 7982 3,5x19	1
M-23	DIN 913 10x10	2	M-26	DIN 7981 4,2x32	8
M-25	Φ 6	4	M-28	3,5x16	8
M-27	DIN 7981 4,2x22	2			

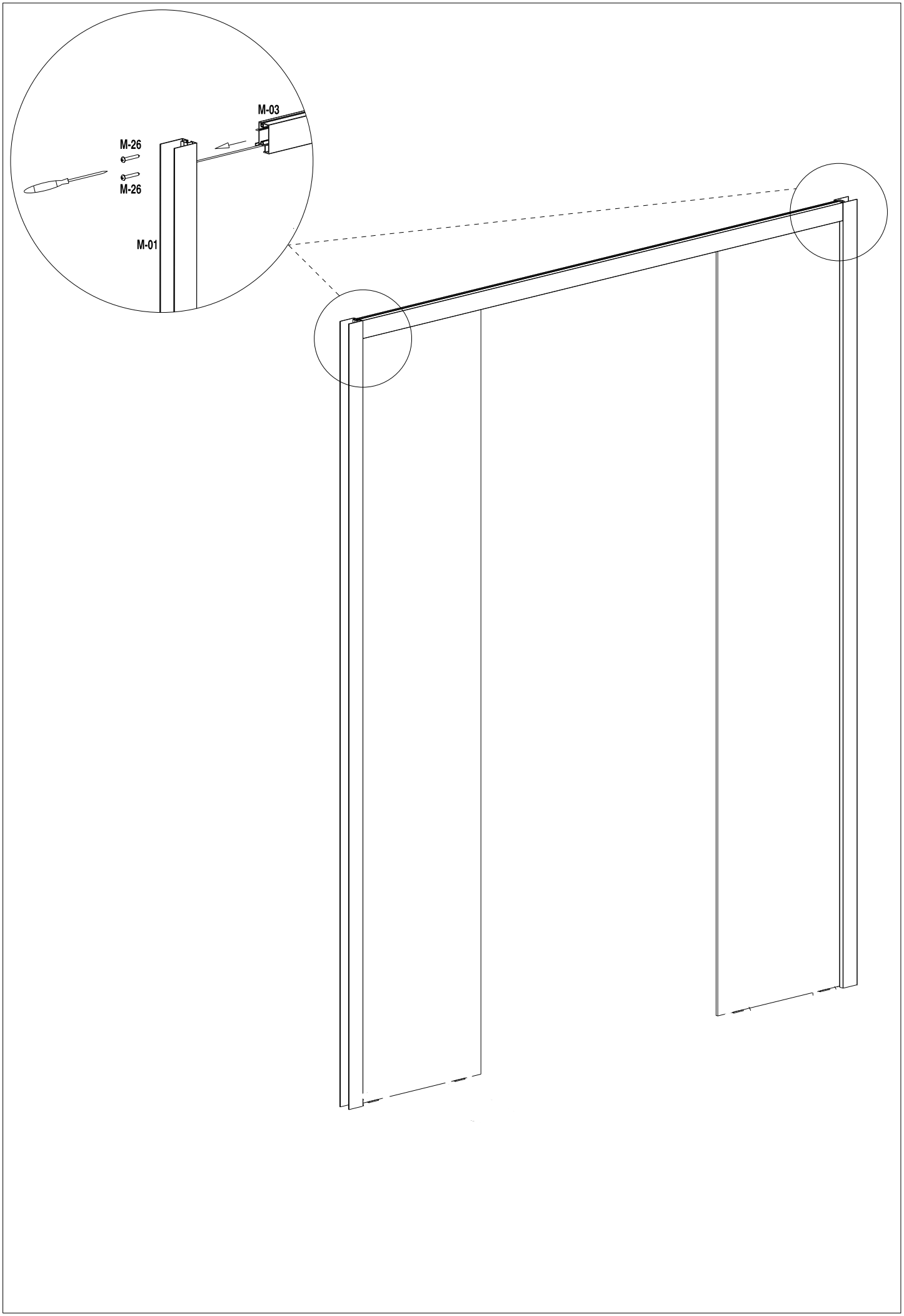
M-03
M-26
M-26
M-01

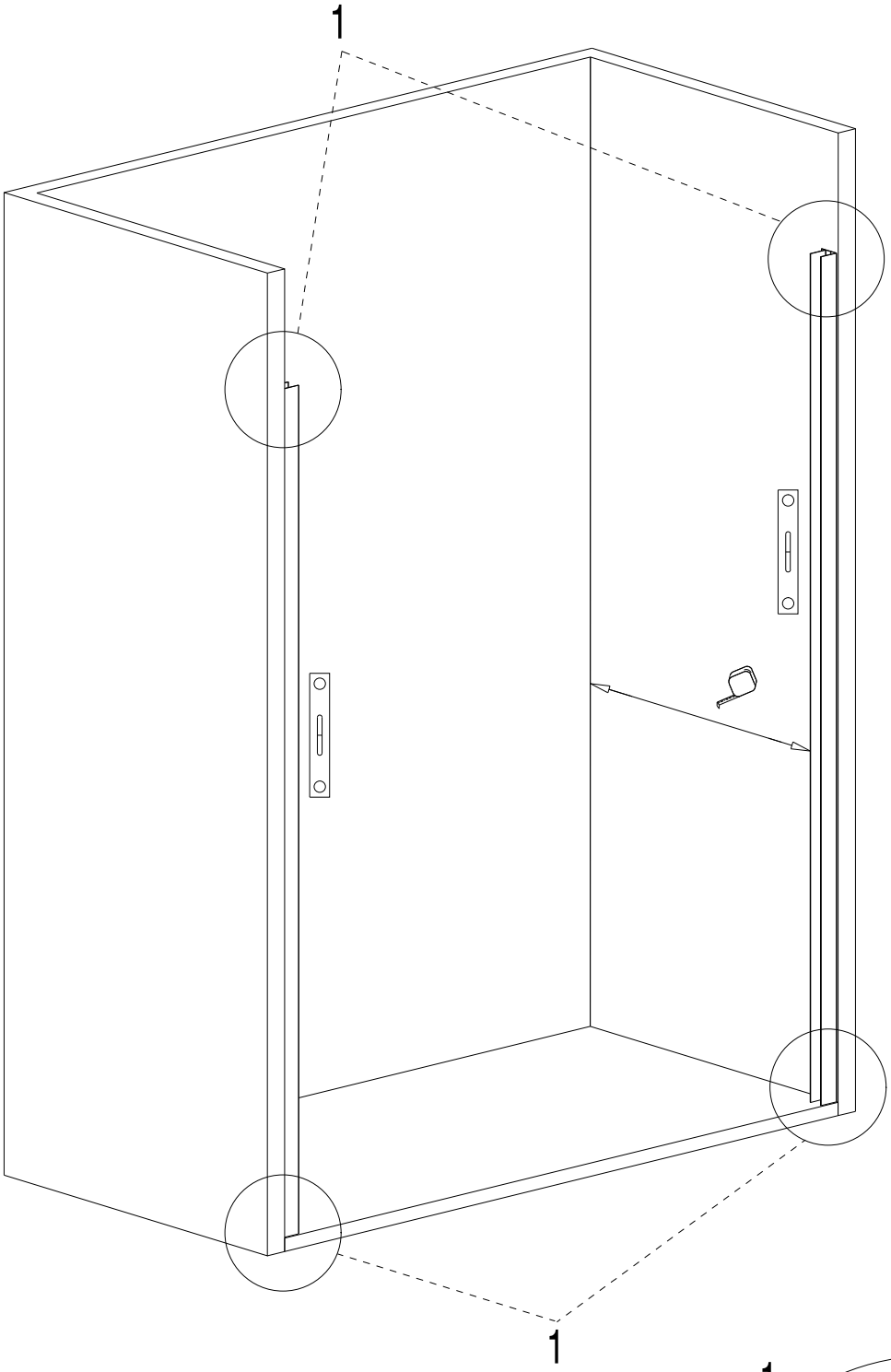
1
1

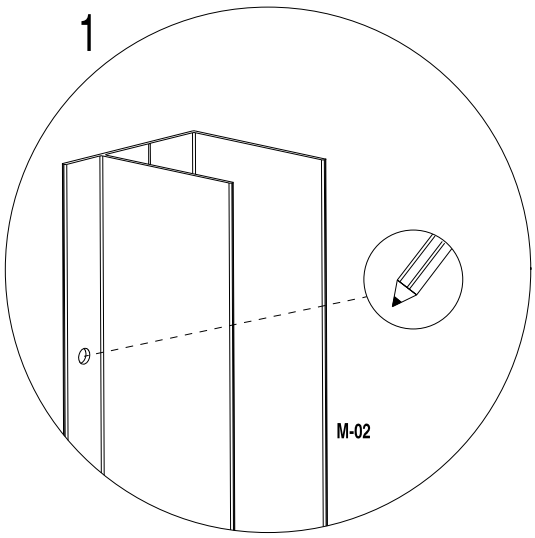
1
M-02

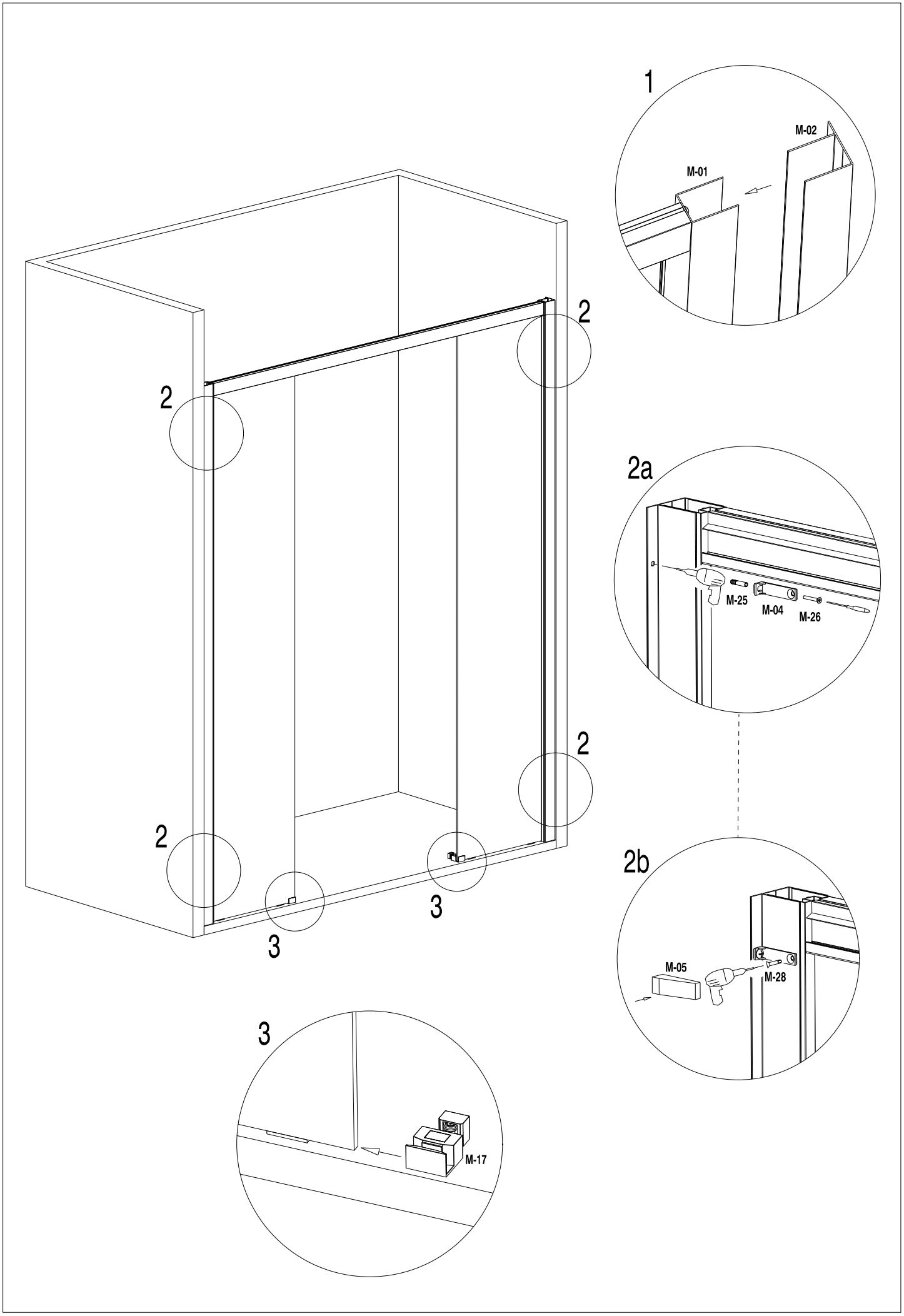
1
M-02
M-01
2
2
2
2
3
3
2a
M-25
M-04
M-26
2b
M-05
M-28
3
M-17

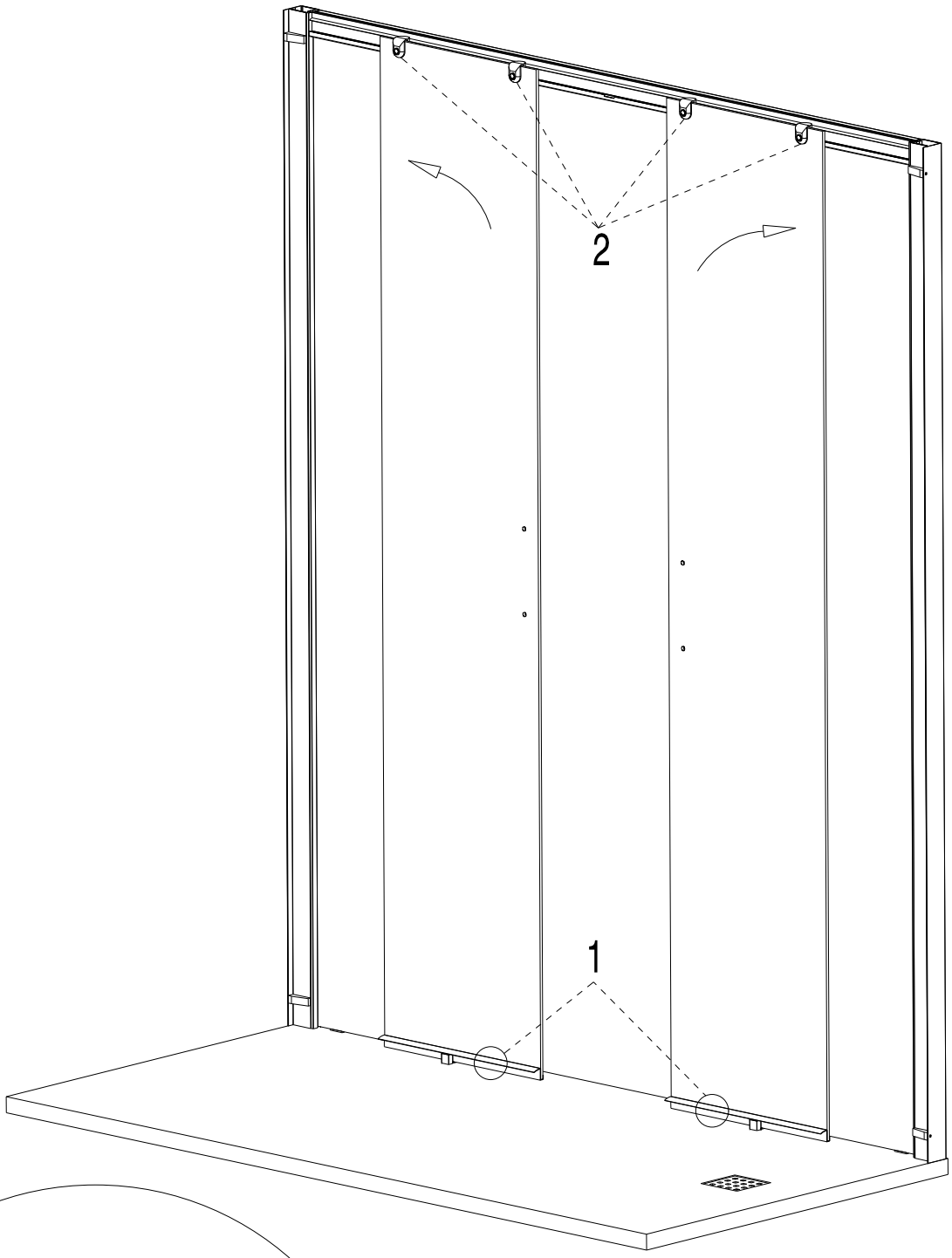
2
1

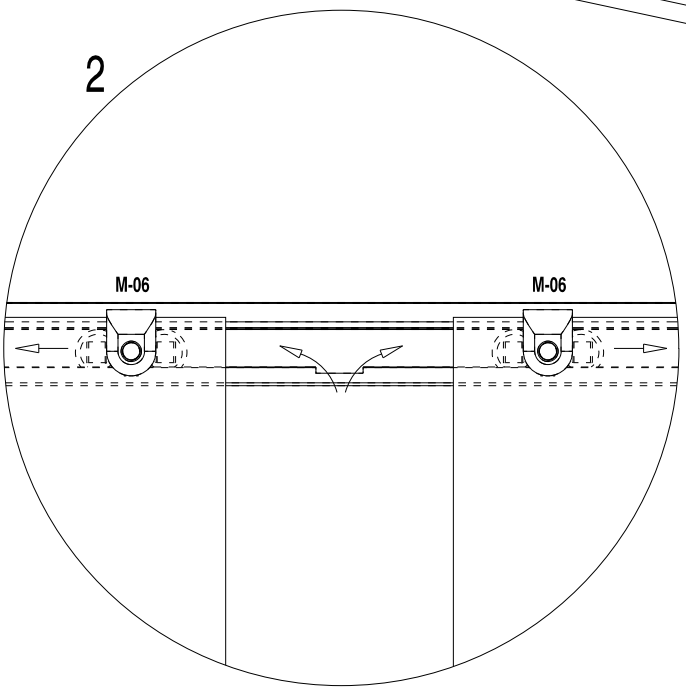
2
M-06
M-06

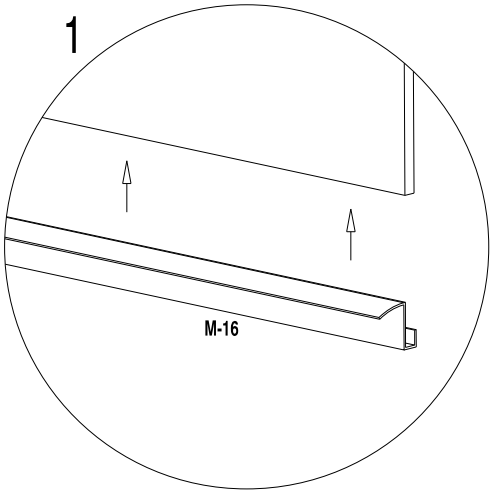
1
M-16

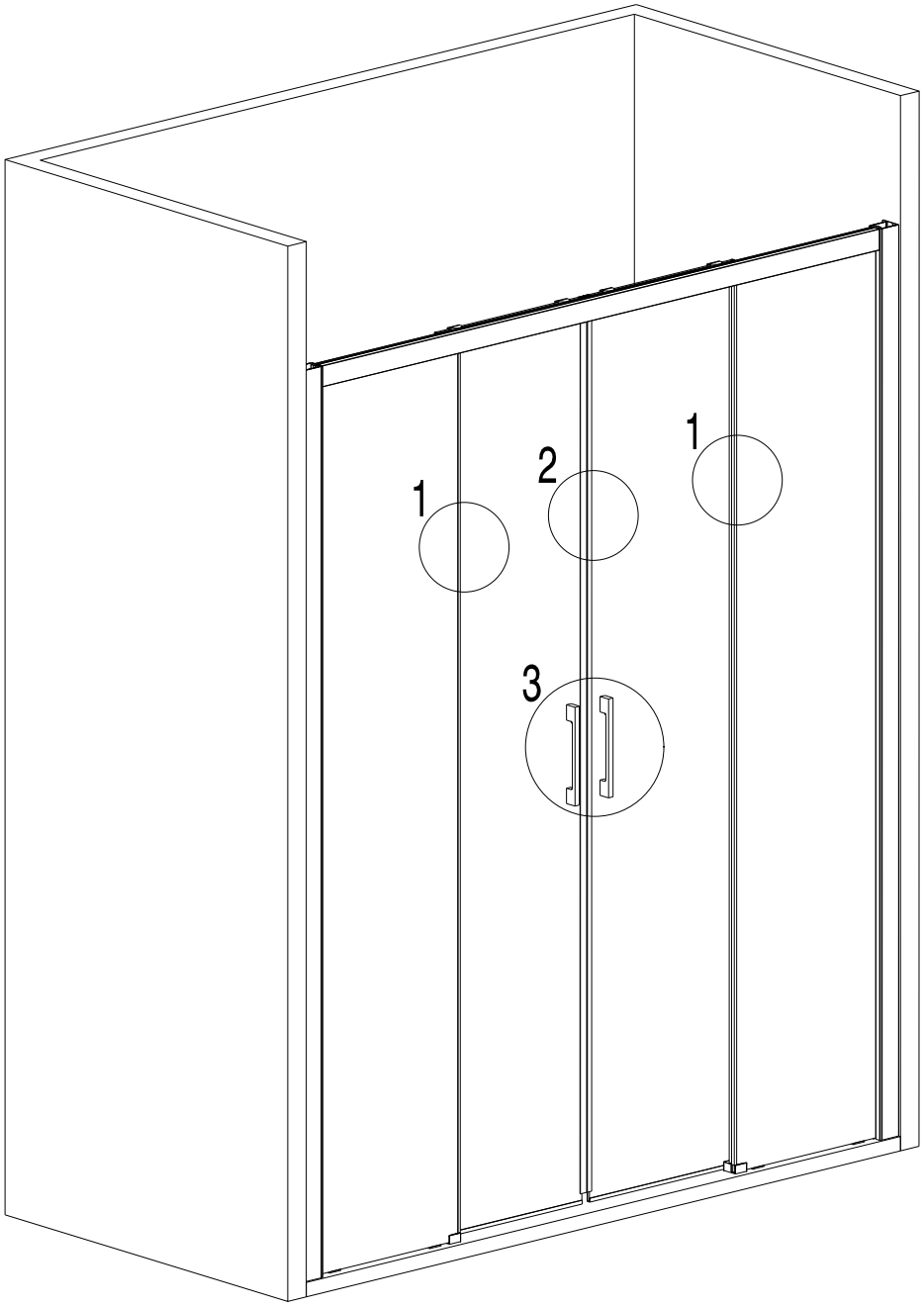
1
2
1
3

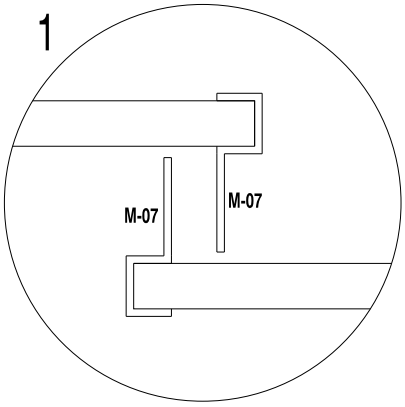
1
M-07
M-07

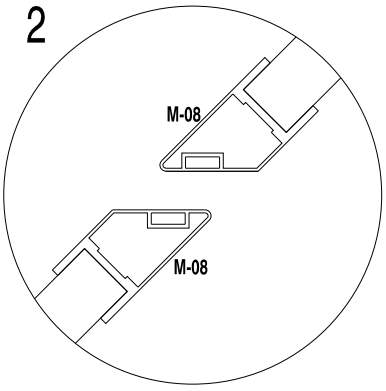
2
M-08
M-08

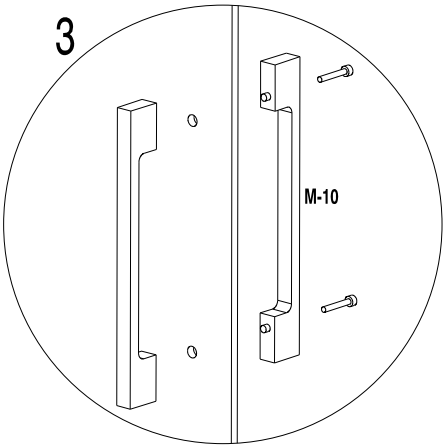
3
M-10

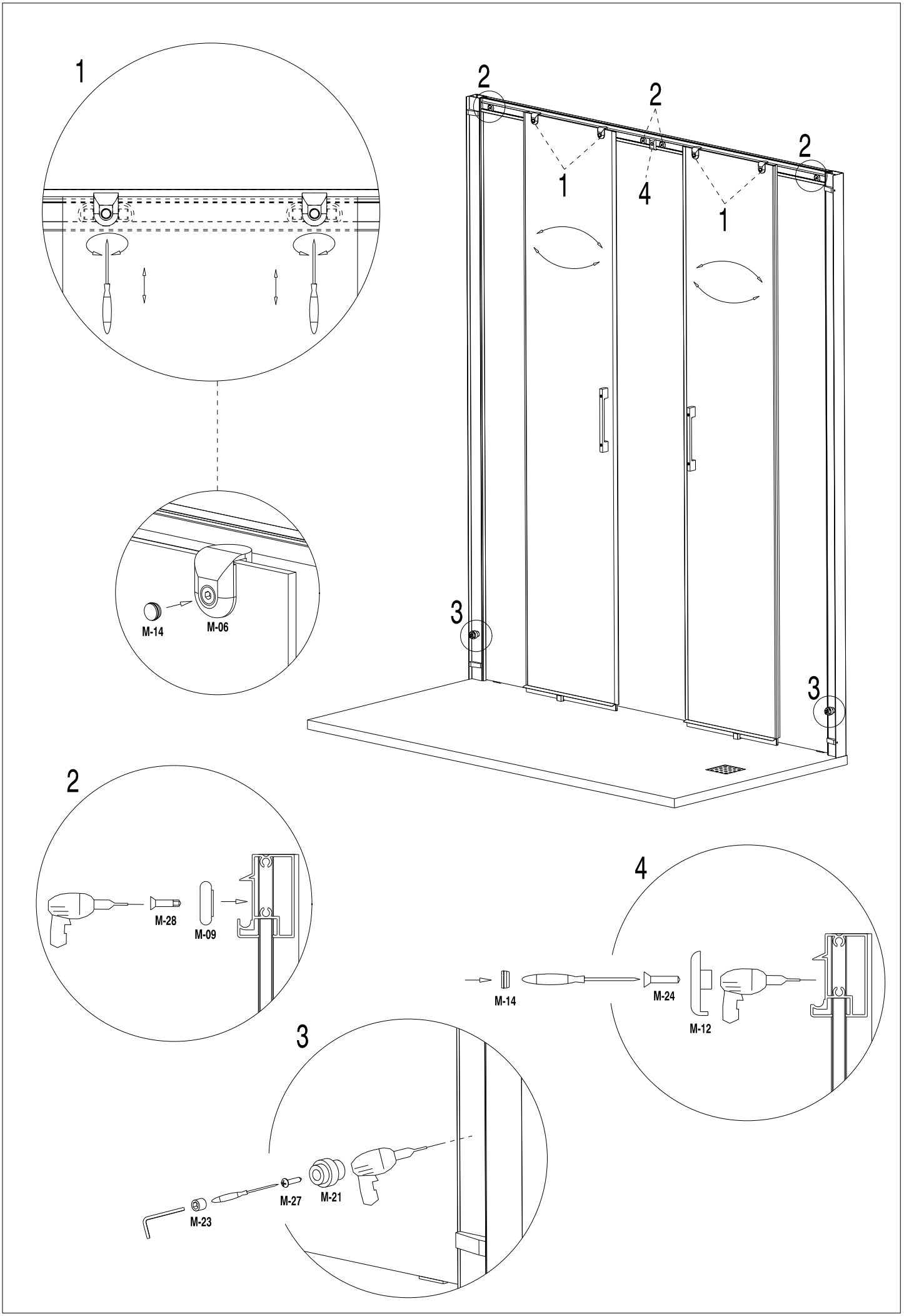
1
M-14
M-06
2
2
2
1
4
1
3
3
2
M-28
M-09
4
M-14
M-24
M-12
3
M-23
M-27
M-21

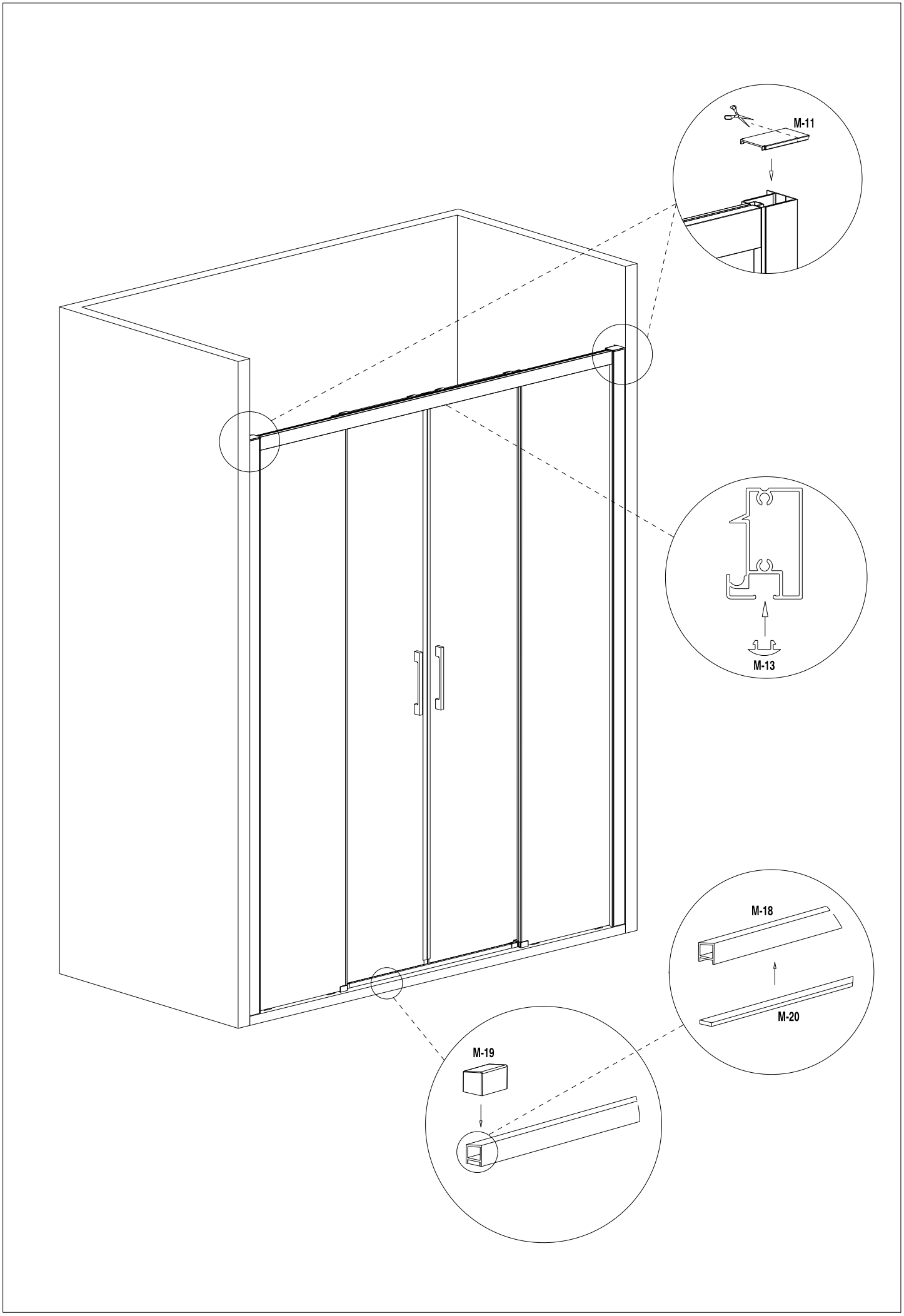
M-11
M-13
M-18
M-20
M-19

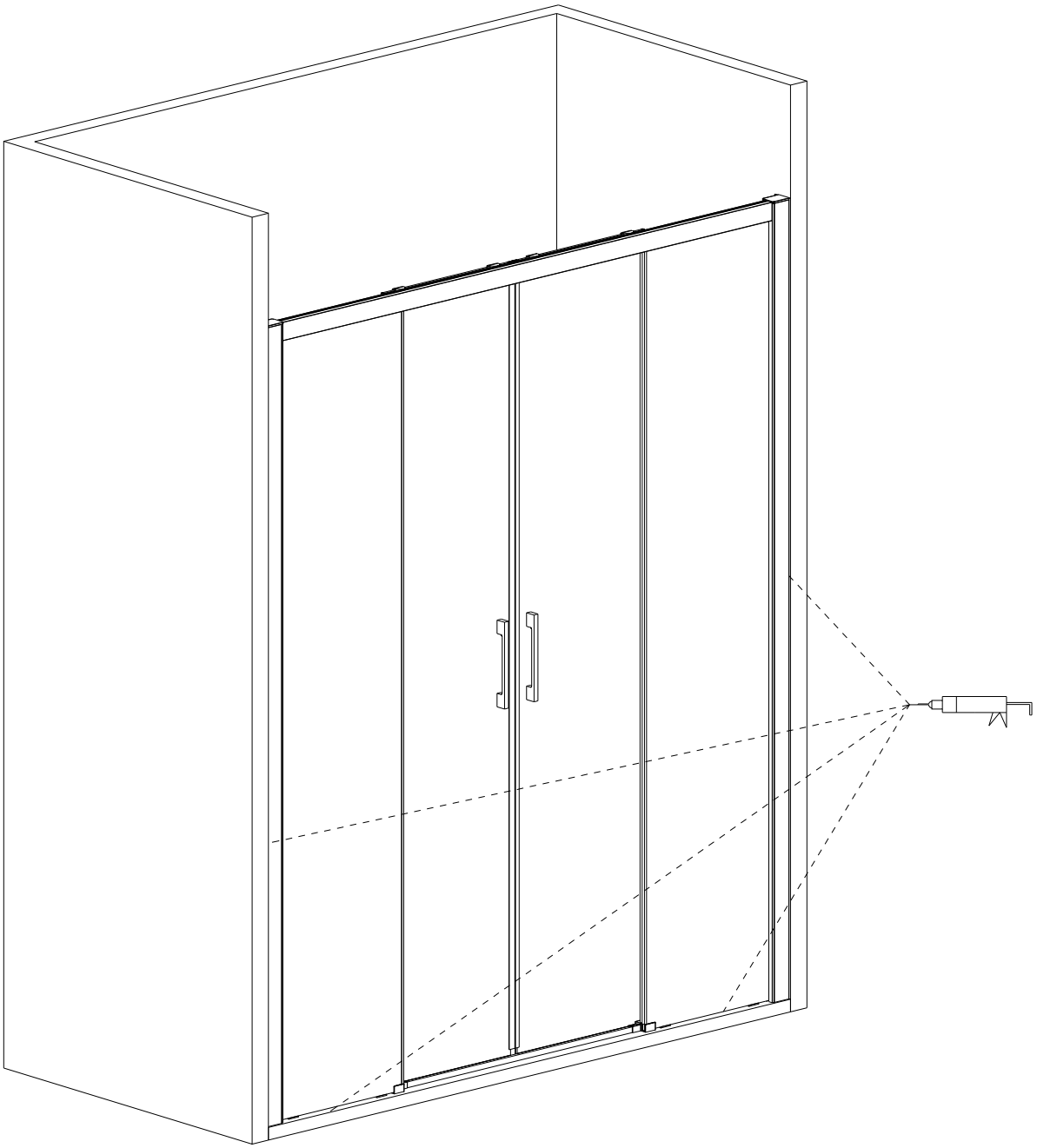

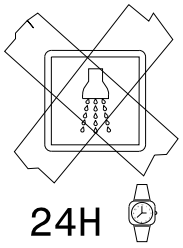
24H

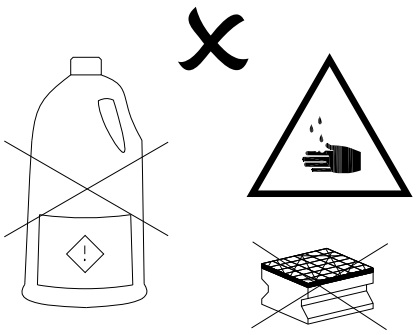

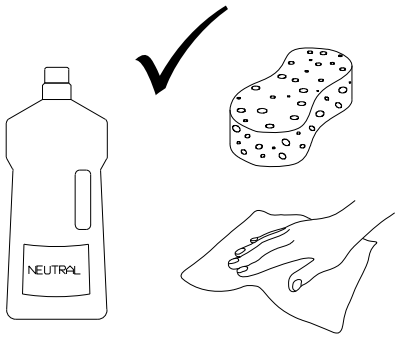
NEUTRAL

expertbath

esbath

made to mesure

ISO 9001
BUREAU VERITAS
Certification

EUROPEAN SYSTEMS SERVICES
contact@expertbath.com

13

UNE-EN 14428